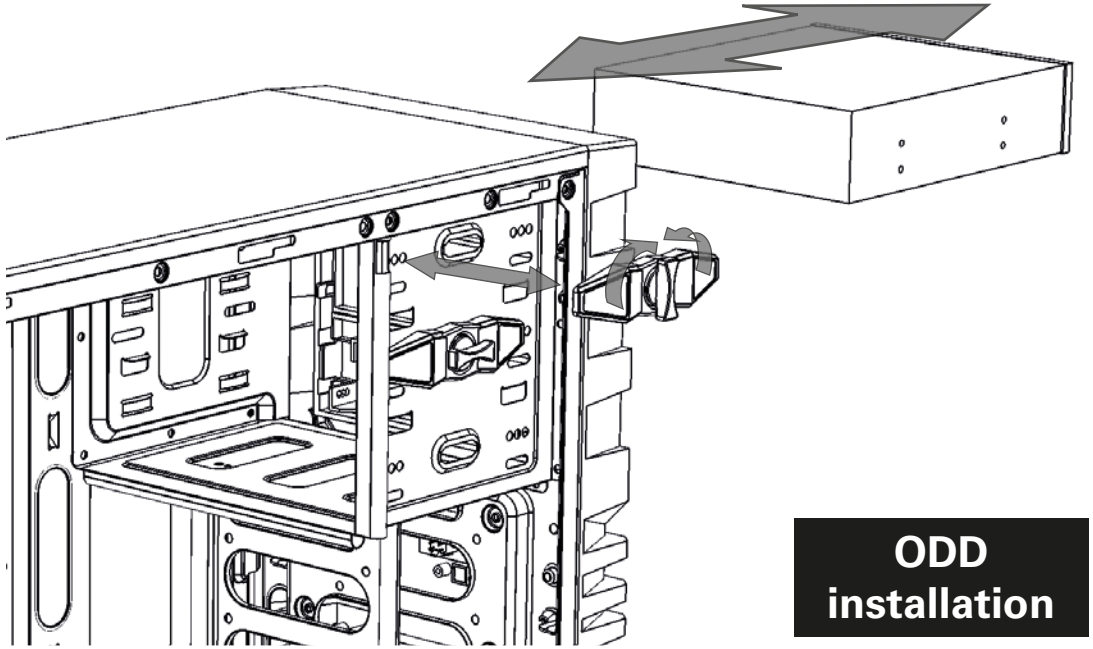

ODD installation

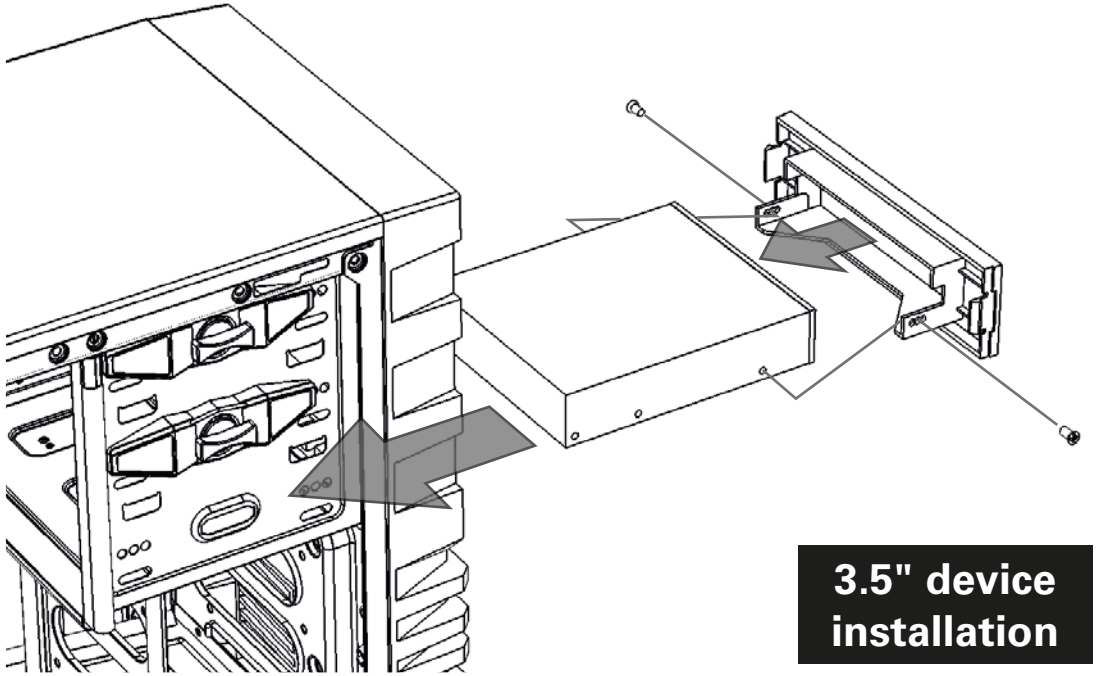

3.5" device installation

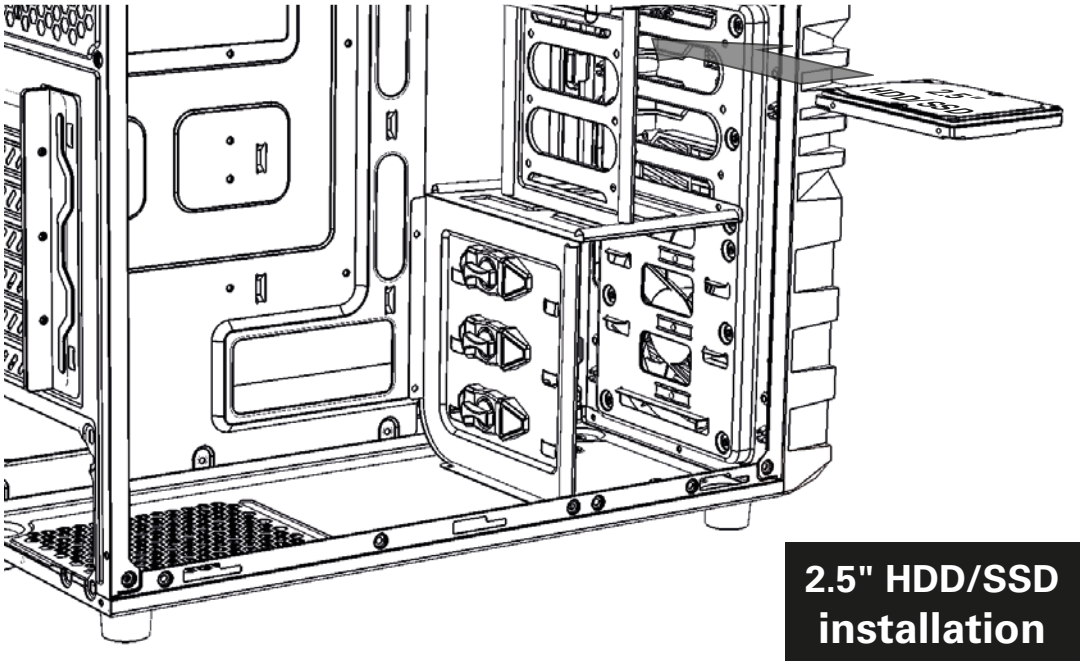

2.5" HDD/SSD installation

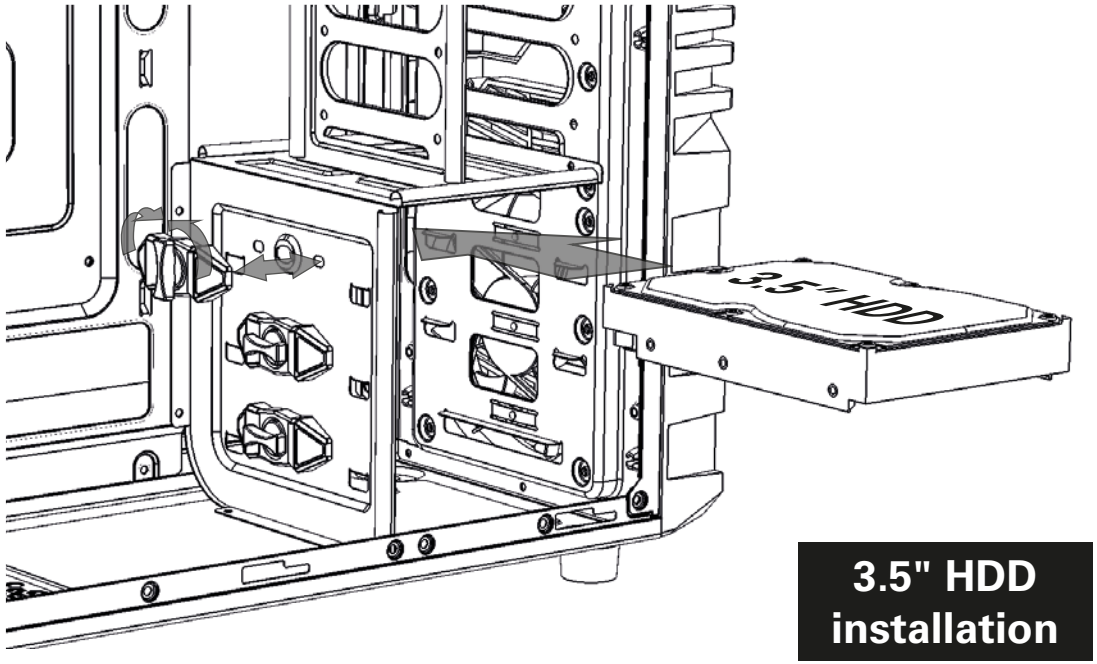

3.5" HDD installation